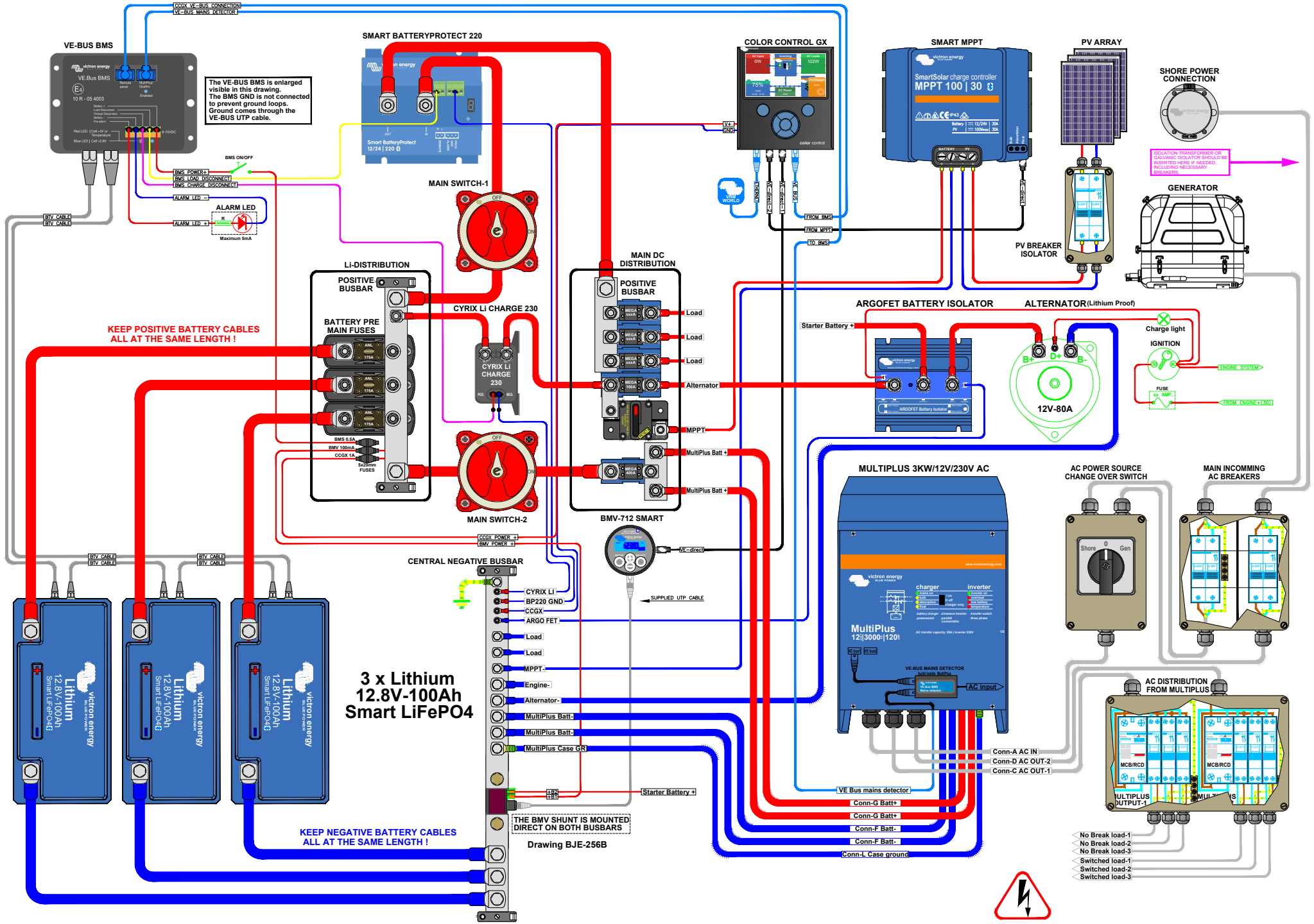


| Smart BatteryProtect programming | Recommended AC Out-2 cable/breaker size MultiPlus | Recommended AC Out-1 cable/breaker size MultiPlus | Recommended DC cable/fuse size MultiPlus | Recommended AC IN cable/breaker size MultiPlus | WARNING |
|---|---|---|---|---|---|
| The BatteryProtect must be programmed for Li-Ion mode and 24 Volt either through programming on the device itself or with a Bluetooth enabled smartphone or tablet. Connect the load disconnect output of the VE.Bus BMS to Remote H terminal. | AC Out-2 only is available when power is present on AC IN-1. During battery operation it will be disconnected. AC Out-2 supports up to 16A and is adjustable. An Earth leakage with breaker or a combination MCB/RCD must be installed on the output. Cable size must be adjusted accordingly. | With Power assist the MultiPlus can add 3KW to the output load when needed. Together with the adjustable 50A input this all adds up to the max sum of input and output current of 50+13=63A. An Earth leakage with breaker or a combination MCB/RCD must be installed on the output. Cable size must be adjusted accordingly. | 0-5 m cable length: 4 x 50SQmm<br>5-10 m cable length: 4 x 70SQmm<br>Cable length stands for the distance between the battery and the MultiPlus connections !!!<br>Recommendations are without other loads in the system and these also should be taken into account for proper main battery, main fuse & main switch cables !!!<br>Fuse size should be 1 x 400A or 2 x 200A | AC IN must be protected by a circuit breaker rated at 50A max or less. This depends heavily on the size of the connected power source.The input currents must be adjusted to fit the size of the connected power source. The breaker and cable size for AC IN should be adjusted accordingly. | 230 VOLT IS EXTREMELY HAZARDOUS DO NOT TOUCH ANY LIFE WIRED PARTS OF THE INSTALLATION !!! WHEN IN DOUBT, ALWAYS CONSULT YOUR VICTRON DEALER !!! |